Oil Management System

The function of oil management system

A proper oil management system is essential to ensure compressor lubrication and energy efficient cooling. An oil management system is a cost effective alternative to replace expensive compressors due to incorrect lubrication. If selected and installed correctly, an oil management system will give years of trouble free operation, protecting the compressors from both low and excess oil levels, with little or no maintenance. Excessive oil within the system can lead to a slug of oil returning to the compressor. A slug of oil can be some damaging to a compressor as a slug of liquid refrigerant.

By moving oil from the discharge gas, the system efficiency is increased. Oil in a refrigeration or air conditioning system reduces the efficiency of the system by:

1. A reduction in heat transfer due to oil coating of the condenser and evaporator walls
2. Displacing refrigerant volume resulting in an system mass flow

Oil management system components

Oil Separator / Oil Reservoir / Oil Level Regulator / Oil Differential Check Valve / Oil Filter

Fixed Oil Level Regulator

The **PROLC-2** oil level regulator controls the oil level in the compressor crankcase with a float operated valve. The regulator maintains the oil level in the compressor crankcase at 1/2'' sight glass. If lower than this level, the float operated valve will open and fill the oil from oil receiver by automatic. If it in the right oil level, the valve will close and stop filling oil. This can keep the compressor running correctly.

Adjustable Oil Level Regulator

The **PROLC-2-5** adjustable oil level regulator allows the oil in the compressor crankcase to be maintained at any level between 1/4'' and 1/2'' sight glass The **PROLC-2-5** maintains the level at any pressure differential between 5 and 90psi. If the oil level in the crankcase is too low, the level can be adjusted by turning the adjustment screw on top of the regulator.This can be done while the systemis in operation. Poly Run exclusive design eliminates the need of shuting down the system and disconnecting the oil feed lines in order to adjust the regulator.

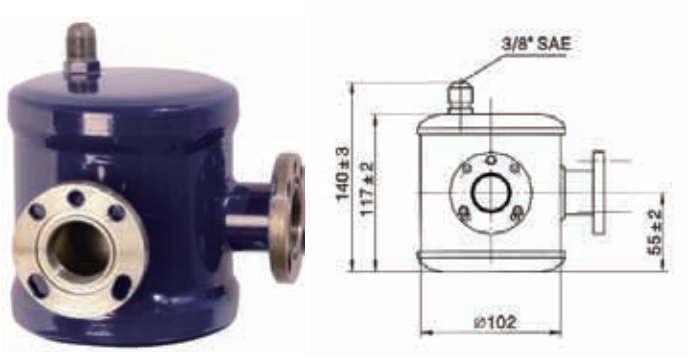

PROLC-2

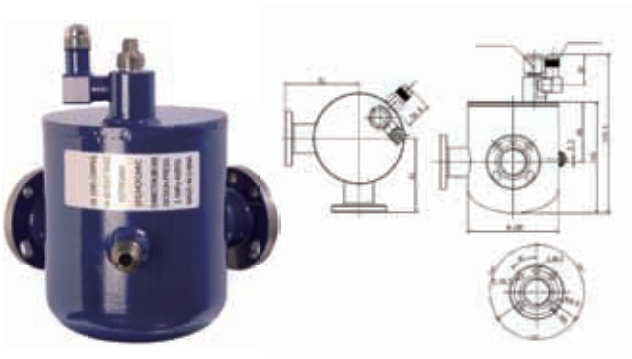

PROLC-2-5 / PROLC-2-5E

Model	Oil Level Sight Glass	Equalization Connection	Suitable with R717&HP	Differential Pressure	Max.Working Pressure	Connection Size
PROLC-2	1/2"	No	No	0.35-6.2bar	31bar	7 Bolts
PROLC-2-5	1/4" to 5/8" Adjustable	No	No	0.35-6.2bar	31bar	7 Bolts
PROLC-2-5E	1/4" to 5/8" Adjustable	3/8''SAE	No	0.35-6.2bar	31bar	7 Bolts

Automotive Oil Separator

During the compressor operating, the outlet line always has a lot of refrigeration oil. In order to ensure the compressor not lose too much refrigeration oil influence heating function of the condenser and cooling function of evaporator. So, between compressor and condenser, it must install one oil separator. It can separate the refrigeration oil and medium. And let the oil go back to compressor automatically and achieve the best cooling result

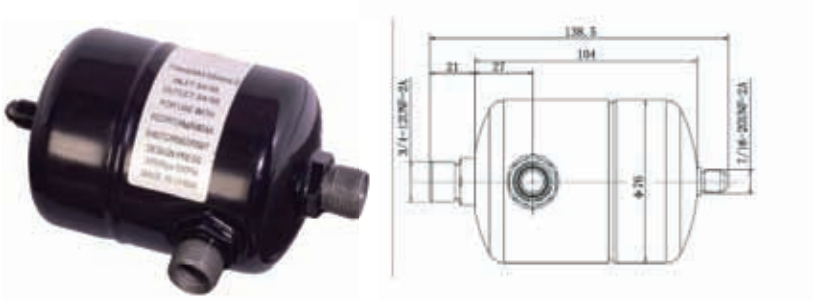

Oil Separator / Demountable Oil Separator

When compressor is in operation, the outlet of compressor always has lots of refrigeration oil. We need to install an oil separator between compressor and condenser to separate the refrigeration oil and refrigerants in order to prevent the compressor not lose too much refrigerant oil and prevent refrigerant oil flow to system with refrigerants to interfere the condenser's heat function and evaporator cooling function. Then the oil will flow back to the compressor crankcase. Oil-return device operates on the ball valve moving on the bottom of oil separator and the sufficiency of oil in compressor and let the compressor reach its best cooling performance

We need to pre-charge the oil before installing oil separator. The oil we charged should be same as the oil in the compressor crankcase

Technical Parameter

Refrigeration Oil: R-22, R-134a, R-404A. R-407C, R-502, R-507

Medium Temperature: -40 to +120℃

Max. Working Pressure: 3100 Kpa

Max. Testing Pressure: 4000 Kpa

Oil Storage Volume: **PRW55833 – 559011/PRW5301 – 5306**, 600ml / **PRW569011 – 569417/PRW6303 – 6305**,800ml

Size		Capacity of Refrigeration on below Evaporator Temperature								
		R-22			R-134a			R-404a		
		-40℃	-20℃	5℃	-40℃	-20℃	5℃	-40℃	-20℃	5℃
PRW-55824	**PRW-5301**	5.3	6.2	7.0	3.2	4.5	6.2	5.3	6.2	7.0
PRW-55855	**PRW-5302**	15.8	17.5	19.3	11.4	13.4	15.8	14.4	16.4	19.3
PRW-55877	**PRW-5303**	24.6	26.2	28.1	16.7	19.3	22.4	22.8	25.2	28.8
PRW-55889	**PRW-5304**	31.7	34.3	37.0	22.4	26.3	29.9	30.0	33.4	37.4
PRW-559011	**PRW-5305**	40.4	43.6	47.5	28.1	33.6	40.4	36.7	43.3	49.0
PRW-569011	**PRW-6303**	45.2	47.4	49.2	33.4	40.4	48.4	41.0	45.2	50.8
PRW-569213	**PRW-6304**	56.3	58.9	63.3	41.3	48.4	56.3	51.0	57.3	65.1
PRW-569417	**PRW-6305**	91.4	102.3	105.5	63.3	74.8	88.8	88.5	98.4	108.6

Three-dimensional Data (for Demountable Oil Separator)

Type	Connection Size (in)	A (mm)	B (mm)	C (mm)
PRW-5301	1/2	102	274	48
PRW-5302	5/8	102	373	48
PRW-5303	7/8	102	458	48
PRW-5304	1-1/8	102	494	48
PRW-5305	1-3/8	102	524	48
PRW-6303	1-3/8	159	392	70
PRW-6304	1-5/8	159	475	70
PRW-6305	2-1/8	159	539	70

5301 **6305** **5303**

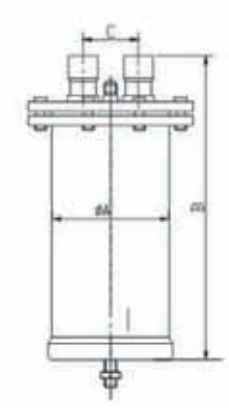

Three-dimensional Data (for Oil Separator)

Type	Connection Size (in)	A (mm)	B (mm)	C (mm)
PRW-55824	1/2	102	279	48
PRW-55855	5/8	102	378	48
PRW-55877	7/8	102	460	48
PRW-55899	1-1/8	102	494	48
PRW-559011	1-3/8	102	524	48
PRW-569011	1-3/8	159	394	75
PRW-569213	1-5/8	159	480	75
PRW-569417	2-1/8	159	485	75

55824 **569213** **559011**

Helical Oil Separator

The helical oil separator features a centrifugal flow path achieving approximately 99% efficiency of oil separation with low pressure drop. Testing by an independent laboratory found that only 0.006% oil by volume was being discharged into the system after leaving a helical oil separator. Poly Run helical oil separator can help to reduce the vibration and noise that caused by compressor. While the parallel compressor system in unloading energy or changing, it still can keep the high oil separation efficiency, because of special design by poly Run for the helical flighting

Installation

Before installing the oil separator, oil pre-charge is required. The charging oil should be kept on above of the oil tank. To pre-charge the oil is very important, this can avoid damaging the needle valve. And the oil we charged must be same as that in the crankcase. The oil separator should be installed on the outlet line which between the compressor and condenser

Note

A check valve should be located downstream of the outlet connection. to prevent liquid refrigerant migrating from the condenser, and with properly pipe disposed. The oil separator must be installed vertically. Proper piping practice should be adopted to prevent excessive loads or vibration at the inlet and outlet connections

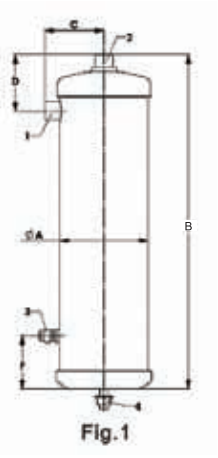

Fig.1

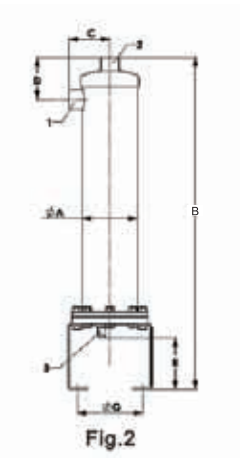

Fig.2

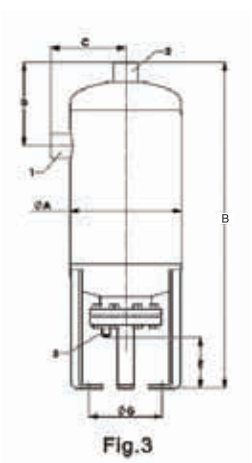

Fig.3

1.Inlet
2.Outlet
3.Oil return,3/8 SAE FLARE
4.M10 Bolt & Nut

Three-dimensional data

Model	Connection Size (in)	Dimensions (mm)							Drawing	Pre-charge (L)
		ØA	B	C	D	E	F	ØG		
PRW-0404	1/2ODS	102	333	69	64	N/A	58.5	N/A	Fig.1	0.4
PRW-0405	5/8ODS	102	384	69	66	N/A	58.5	N/A	Fig.1	0.4
PRW-0407	7/8ODS	102	434	74	76	N/A	58.5	N/A	Fig.1	0.4
PRW-0409	1-1/8ODS	102	483	75	78	N/A	58.5	N/A	Fig.1	0.4
PRW-0611	1-3/8ODS	159	384	108	91	N/A	60.5	N/A	Fig.1	1.1
PRW-0613	1-5/8ODS	159	428	108	98	N/A	60.5	N/A	Fig.1	1.1
PRW-0617	2-1/8ODS	159	436	114	105	N/A	60.5	N/A	Fig.1	1.1
PRW-0611F	1-3/8ODS	159	508	108	91	99	N/A	113	Fig.2	0.7
PRW-0613F	1-5/8ODS	159	559	108	98	99	N/A	113	Fig.2	0.7
PRW-0617F	2-1/8ODS	159	559	114	105	99	N/A	113	Fig.2	0.7
PRW-0813F	1-5/8ODS	219	641	148	164	100	N/A	166	Fig.3	0.7
PRW-0817F	2-1/8ODS	219	641	148	164	100	N/A	166	Fig.3	0.7
PRW-1021F	2-5/8ODS	273	750	183	201	100	N/A	223	Fig.3	0.7
PRW-1225F	3-1/8ODF	325	821	215	229	100	N/A	273	Fig.3	0.7

Technic Parameter

Model	Capacity of Refrigeration at Nominal Evaporator Temperature (KW)						Max. Discharge Volume (L)
	R-404a / R-507		R-22		R-717(Remark)		
	-40℃	5℃	-40℃	5℃	-40℃	5℃	
PRW-0404	5.3	7	5.3	7	N/A	N/A	2.6
PRW-0405	14.1	19.4	15.8	19.4	N/A	N/A	6.8
PRW-0407	23	30	24.6	28.2	N/A	N/A	10.2
PRW-0409	29.8	38.7	31.7	37	N/A	N/A	13.6
PRW-0611	42.2	52.8	44.8	49.3	59.8	63.3	18.7
PRW-0613	52.2	66	56	62	77	80	23.6
PRW-0617	84.3	108	87	105	120	127	37.4
PRW-0611F	42.2	52.8	44.8	49.3	59.8	63.3	18.7
PRW-0613F	52.5	66	56	62	77	80	23.6
PRW-0617F	84.3	108	87	105	120	127	37.4
PRW-0813F	84.4	109	88	106	120	127	37.4
PRW-0817F	109	144	123	137	N/A	N/A	49.3
PRW-1021F	225	292	250	281	N/A	N/A	102
PRW-1225F	352	461	394	447	N/A	N/A	159.8
Remark: All data is for a 38℃ condensing temperature, 18℃ suction temperature and a connection size the same as the compressor discharge valve							

Oil Storage Separator

Oil storage separator is used on parallel screw compressor. It can achieve very good oil separation purpose in the lowest pressure drop. It can store the separated oil in the bottom of the vessel, and will send the oil to each compressor crankcase by the electronic oil level regulator relyed with pressure differential

Feature

1. With oil receiver inside, do not need to add a separated oil storage. It saved a lot of time and material, also reduced the leaking problem
2. It can help to reduce the vibration and noise that caused by compressor
3. It needs to add the electronic oil level regulator to replace the check valves
4. Max. Working Pressure: 3.0 MPa
5. Higher efficiency oil separation
6. Compatible with all CFC, HCFC and HFC refrigerants and related oils
7. Working Temperature Range: -40℃ to +120℃

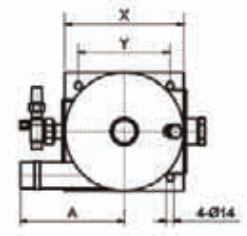

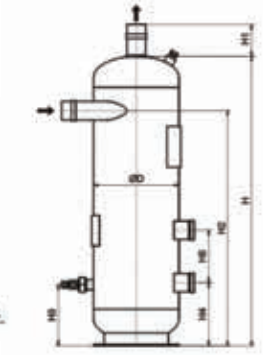

Technic Parameter

Model	Joint Size (in)	ØD	H	H1	H2	H3	H4	H5	A	X	Y	Oil Outlet (SAE)	Oil Volume (L)		Total Volume (L)
		(mm)											V1	V1	
PRW-0813L	1-5/8	219	744	82	604	157	162	135	191	219	165	3/8	4.4	9.0	24
PRW-1017L	2-1/8	273	850	87	691	169	189	150	223	273	227	1/2	8.1	16.0	42
PRW-1221L	2-5/8	325	950	95	750	184	204	150	258	325	280	1/2	12	23.0	66
PRW-1425L	3-1/8	377	1034	110	823	215	234	150	280	377	320	5/8	18.5	34.0	97
PRW-1629L	3-5/8	412	1135	100	903	209	229	150	318	412	336	5/8	22	41.0	131

Differential Check Valve

PRV-20 Differential check valve is situated on the 3/8''SAE connector on the top of the oil receiver. It can release the pressure from oil receiver to suction pipes, so that it can keep the pressure to a fixed number. If there is enough oil in the oil receiver, then differential check valve will ensure the oil to flow from oil receiver to oil regulator.
Pressure differentia initialization: 20psi (1.38bar)

Oil Receiver

Due to system design, loads & defrost cycles, varying amounts of oil can be returned by the oil separator. So a safety reserve of oil is required for the operation of our oil control system. The oil receiver is the holding vessel for this stand-by oil. It has sight glass ports to observe the oil inside the vessel. The vavle on top of the oil receiver receives oil from the oil separator, and the bottom valve distributes oil to the oil regulator. The valves are back seating and have a 1/4''SAE connection, allowing the addition or removal of oil from the receiver. High pressure gas returns with the oil from the oil separator to the oil receiver. Pressure could increase in the oil receiver to adversely affect the oil regulators. To prevent this, a vent line is installed from the top of the oil receiver to the suction line. This line permits the pressure in the oil receiver to be approximately the same as suction line and the compressor crankcase

Feature

1. Nine sizes available in both standard and high pressure ranges
2. Robust construction
3. Sight glass with floating ball
4. Standard models supplied with mounting brackets
5. Premium quality O-ring seats

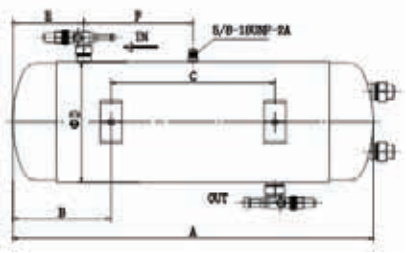

PROR-8

PROR-14

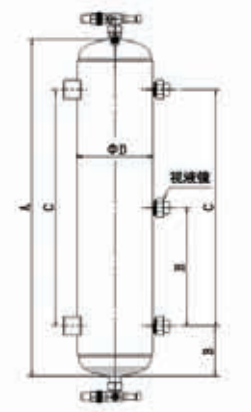

Technic Parameter

Model	Inlet and Outlet Size (in)	A (mm)	B (mm)	C (mm)	D (mm)	E (mm)	F (mm)	Number of Sight Glass	Oil Storage Volume (L)
PROR-6	3/8	338	94	150	165	-	-	2	6
PROR-8	3/8	438	109	220	165	-	-	2	8
PROR-10	3/8	548	131	285	165	-	-	2	10
PROR-12	3/8	638	139	360	165	-	-	2	12
PROR-14	1/2	738	110	518	165	259	-	3	14
PROR-19	1/2	580	140	300	219	-	-	2	19
PROR-23	5/8	700	140	420	219	210	-	3	23
PROR-10CL	3/8, 1/2	548	144	260	165	90	208	2	10
PROR-20CL	3/8, 5/8	660	180	300	219	130	200	2	20

Oil Filter

PRG Series oil filter can filtrate 99% of 3 micron grain but still have enough flow rate to maintain the flow pressure drop. PRG series oil filter has a very high capacity of filtration. It can return the cleanness POE oil and mineral oil back to the compressor. The clean oil not only can make sure the oil regulator working properly but also can reduce the abrasion of the compressor. PRG series oil filter actually can release changing oil for compressor that caused by suspend feculence during the working

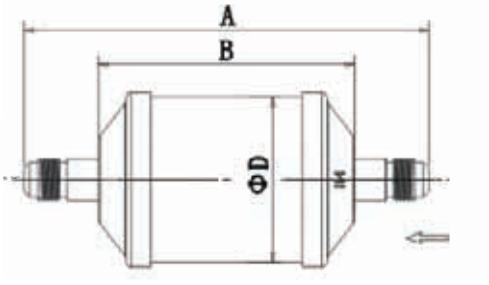

Model	Connection port (in)		Liquid Refrigeration Quantity				A (mm)	B (mm)	D (mm)
	Welding port	Thread port	R-134a	R-22	R-404a	R-502			
PRG-083	-	3/8	21.8	23.7	15.7	15.4	155	98	63.5
PRG-083S	3/8	-	27.4	29.8	19.8	19.3	146		
PRG-084	-	1/2	21.8	23.7	15.7	15.4	163		
PRG-084S	1/2	-	27.4	29.8	19.8	19.3	148		
PRG-085	-	5/8	27.4	29.8	19.8	19.3	146		